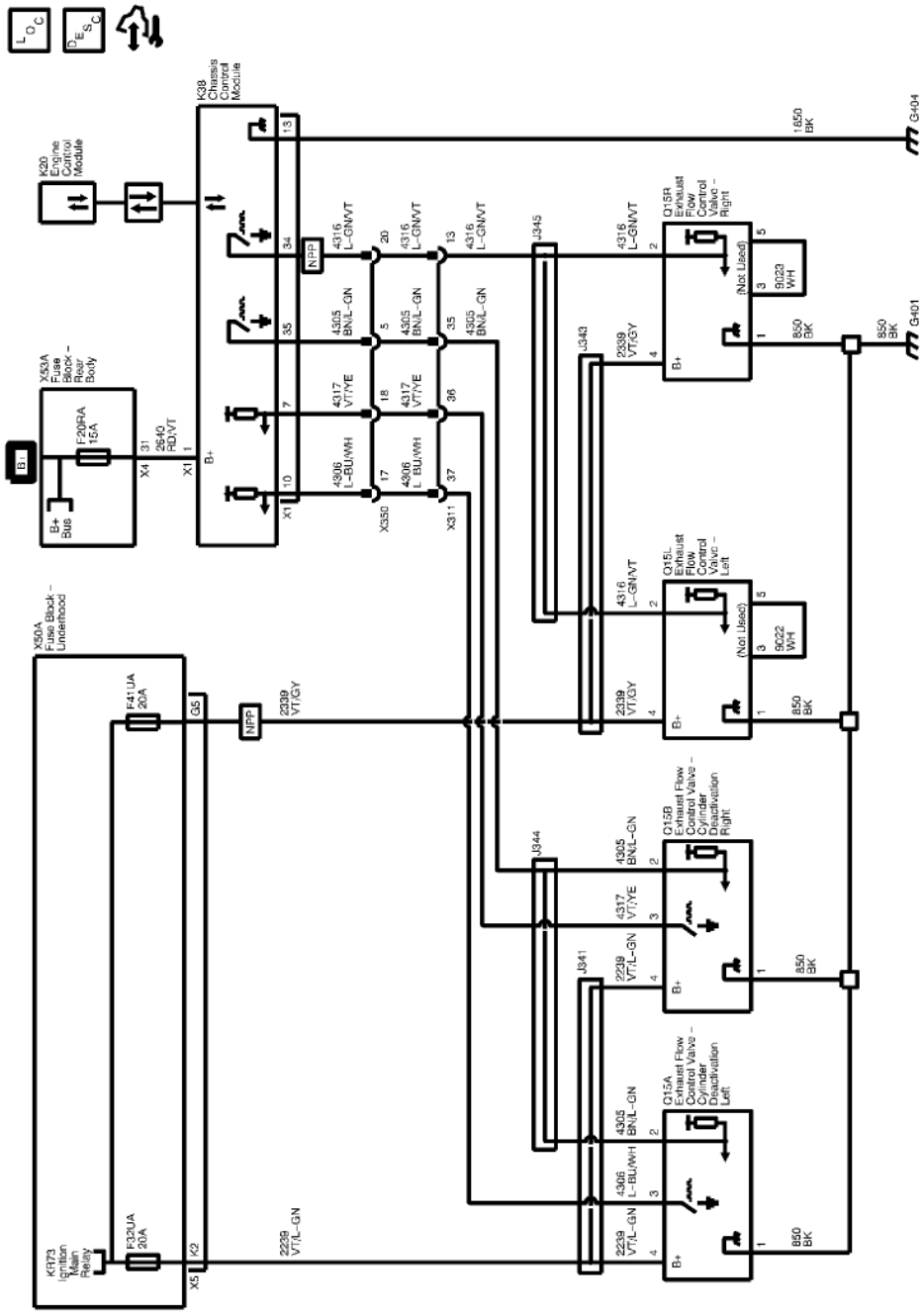[Close Window] [Print Window]